Receptacle, M12, Push-Pull outer locking, female, straight, 4 poles, D-coded, front wall-mounting, wire contact, Industrial Ethernet

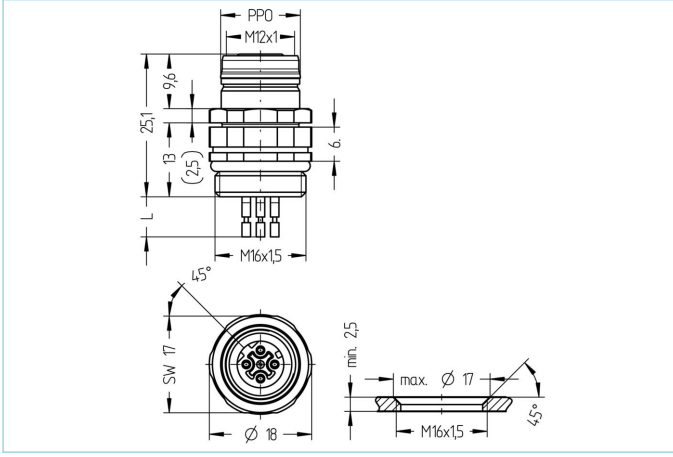

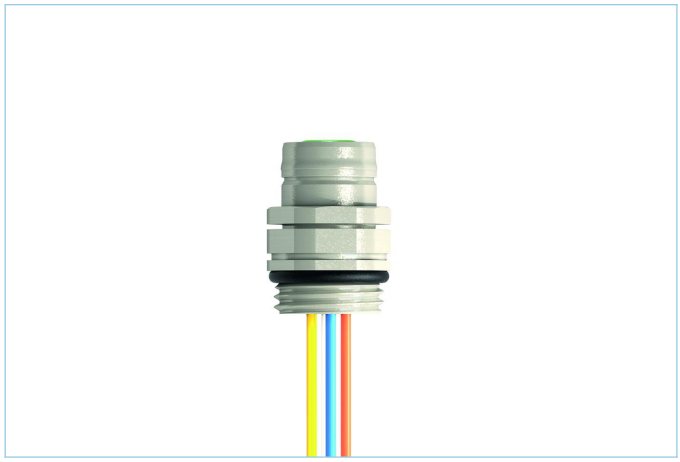

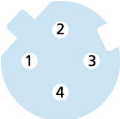

Product data	
Item description	IE-PPOFVM12KUD4.029-0,5/M16/S520
Item-No.	8122028
Customs tariff-No.	85444290
Packaging unit	5
Step-File	IE-PPOFVM12KUD4-m_M16_S520.stp
EAN	4047106340988

Technical data	
Connector	female, straight, M12
Number of pins	4
Pin assignment	1 YE, 2 WH, 3 OG, 4 BU
Coding	D
Rated voltage	60V DC
Current load per pin (at 40°C)	4A
Insulation resistance	≥10^8Ω
Ambient temperature product	-30°C...+90°C
Contact material	Metal, CuSn, gold-plated
Contact-carrier material	Plastic, TPU, GN
Receptacle housing material	Metal, CuZn, nickel-plated
Sealing (female) material	FPM/FKM
Material of external sealing	NBR
Mounting direction	Front wall-mounting, positionable
Wire length	0.50m
Wire colors	YE/OG ; WH/BU
Wire cross-section	4 x 0.34 mm²
Wire insulation material	PVC
Fastening thread	M16x1.5
Wall thickness area mounting thread	min. 2,5 mm

The information contained in this data sheet was compiled with the utmost care. The liability for the correctness, completeness and timelines is limited to gross negligence.

Connecting type	Wire contact
Standards	IEC 61076-2-010
Degree of protection (mounted)	IP65, IP67, IP68
Mechanical life-cycle	>100 mating cycles
Degree of pollution	3
Style	straight
Tightening torque housing/flange	2,0 Nm

Classification

eCl@ss 6.0	27279220
eCl@ss 7.0	27440103
eCl@ss 8.0	27440103
eCl@ss 9.0	27440103
ETIM 5.0	EC002061
ETIM 6.0	EC002061

Link to product

https://www.escha.net/en/8122028

The information contained in this data sheet was compiled with the utmost care. The liability for the correctness, completeness and timelines is limited to gross negligence.